Combinational Logic Circuits

Md. Islahur Rahman Ebon
Lecturer, EEE, NBIU
Mob: 01721000469
Email: irebon.rus121@gmail.com

Example

Reduce the combinational logic circuit in Fig.(6-6) to a minimum form.

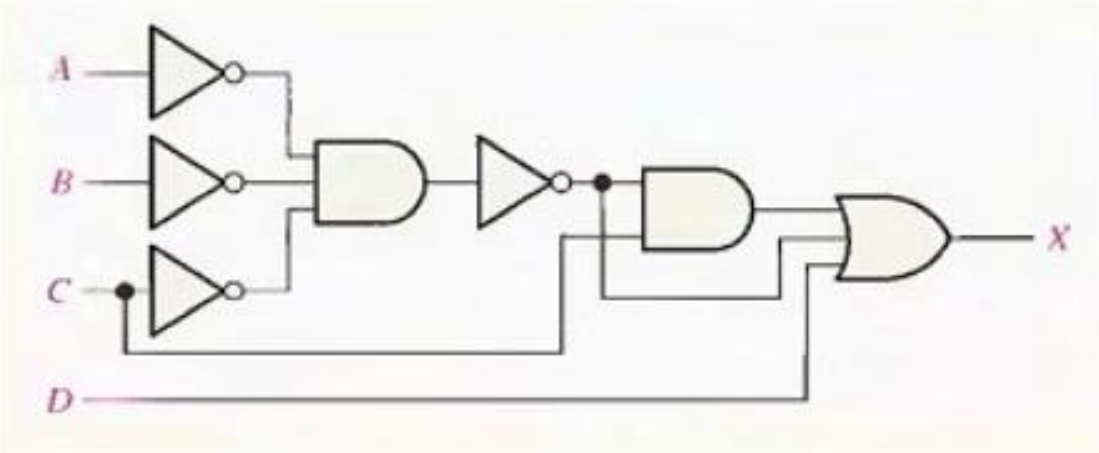

Solution

The expression for the output of the circuit is

$$X = \overline{(\overline{A}\,\overline{B}\,\overline{C})}\,C + \overline{\overline{A}\,\overline{B}\,\overline{C}}\,\overline{+}\,D$$

Applying DeMorgan's theorem and Boolean algebra,

$$\begin{aligned}
X &= (\overline{\overline{A}} + \overline{\overline{B}} + \overline{\overline{C}})C + \overline{\overline{A}} + \overline{\overline{B}} + \overline{\overline{C}} + D \\
&= AC + BC + CC + A + B + C + D \\
&= AC + BC + C + A + B + \cancel{C} + D \\
&= C(A + B + 1) + A + B + D \\
X &= A + B + C + D
\end{aligned}$$

The simplified circuit is a 4-input OR gate as shown in Fig.(6-7).

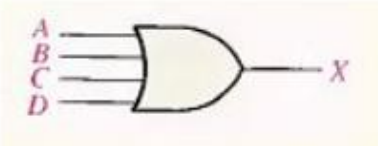

THE UNIVERSAL PROPERTY OF NAND AND NOR GATES

1- The NAND Gate as a Universal Logic Element

The NAND gate is a universal gate because it can be used to produce the NOT, the AND, the OR, and the NOR functions. An inverter can be made from a NAND gate by connecting all of the inputs together and creating, in effect, a single input, as shown in Fig.(6-8)(a) for a 2-input gate. An AND function can be generated by the use of NAND gates alone, as shown in Fig.(6-8)(b). An OR function can be produced with only NAND gates, as illustrated in part (c). Finally. a NOR function is produced as shown in part (d).

(a) One NAND gate used as an inverter

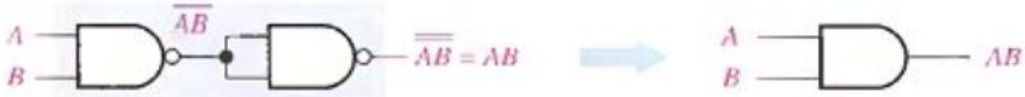

(b) Two NAND gates used as an AND gate

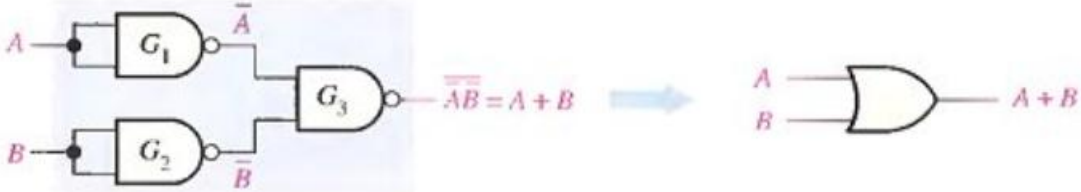

(c) Three NAND gates used as an OR gate

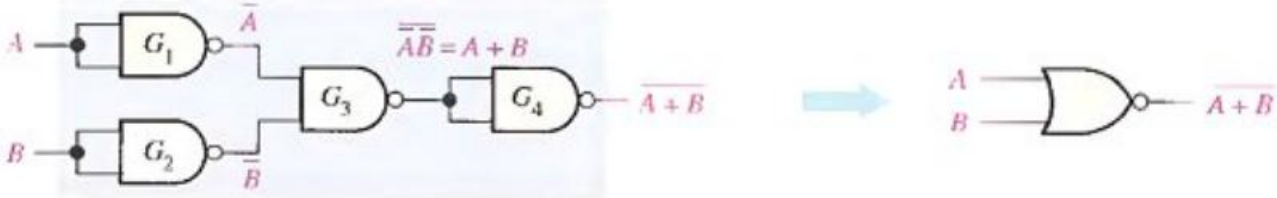

(d) Four NAND gates used as a NOR gate

2- The NOR Gate as a Universal Logic Element

Like the NAND gate, the NOR gate can be used to produce the NOT, AND. OR and NAND functions. A NOT circuit, or inverter, can be made from a NOR gate by connecting all of the inputs together to effectively create a single input, as shown in Fig.(6-10)(a) with a 2-input example. Also, an OR gate can be produced from NOR gates, as illustrated in Fig.(6-10)(b). An AND gate can be constructed by the use of NOR gates, as shown in Fig.(6-10)(c). In this case the NOR gates G 1 and G 2 are used as inverters, and the final output is derived by the use of DeMorgan's theorem as follows:

$$X=\overline{\overline{A}+\overline{B}}=AB$$

Fig.(6-10)(d) shows how NOR gates are used t0 form a NAND function.

(a) One NOR gate used as an inverter

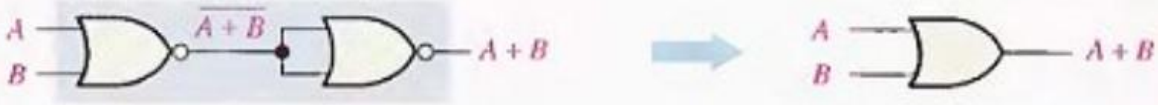

(b) Two NOR gates used as an OR gate

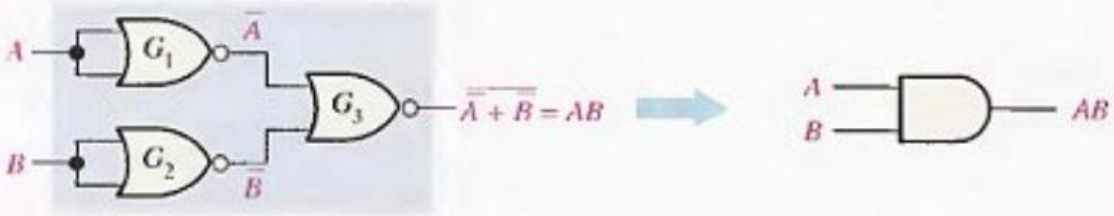

(c) Three NOR gates used as an AND gate

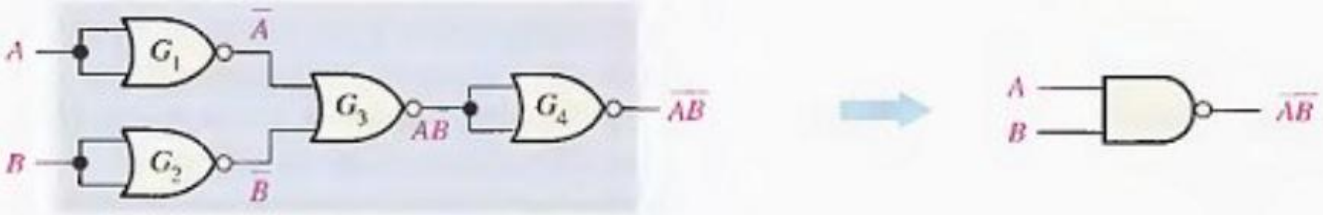

(d) Four NOR gates used as a NAND gate

BASIC ADDERS

A half-adder adds two bits and produces a sum and a carry output. Adders are important in computers and also in other types of digital systems in which numerical data are processed.

The Half-Adder

Recall the basic rules for binary.

0+ 0= 0

0+ 1= 1

1+ 0= 1

1 + 1 = 10

The operations are performed by a logic circuit called a half-adder.

The half-adder accepts two binary digits on its inputs and produces two binary digits on its outputs, a sum bit and a carry bit.

A half-adder is represented by the logic symbol in Fig.(7-1).

Half-Adder Logic: From the operation of the half-adder as stated in Table 7-1, expressions can be derived for the sum and the output carry as functions of the inputs. Notice that the output Carry (C_{out}) is a 1 only when both A and B are 1s: therefore. C_{out} can be expressed

$$C_{out} = AB$$

Now observe that the sum output ($\sum$) is a 1 only if the input variables A and B, are not equal. The sum can therefore be expressed as the exclusive-OR of the input variables.

$$\sum = A \oplus B$$

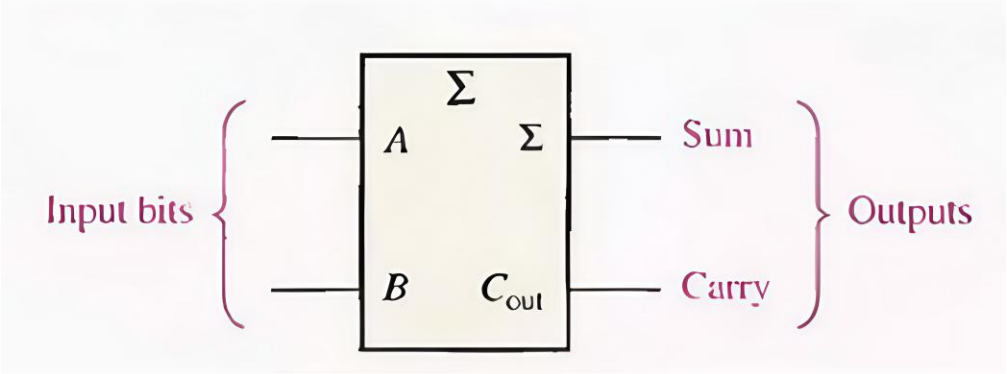

Fig.(7-1) Logic symbol for a half-adder.

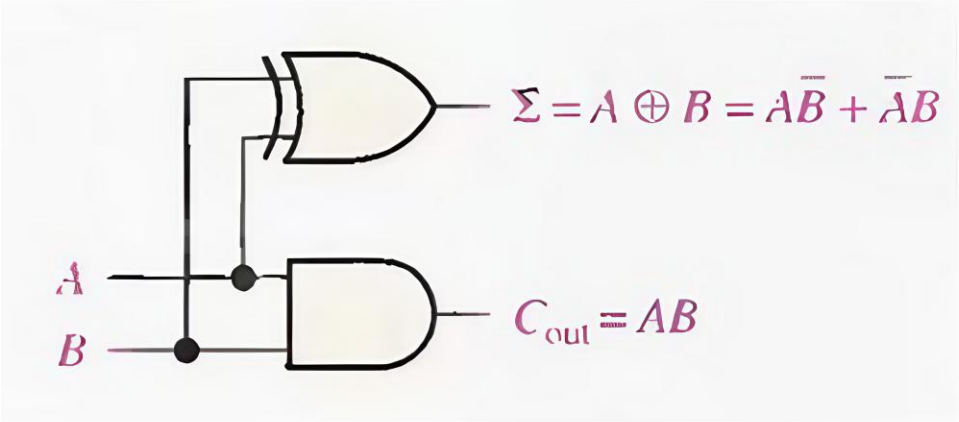

Fig.(7-2) Half-adder logic diagram.

Table 7-1

A	B	C_{out}	Σ
0	0	0	0
0	1	0	1
1	0	0	1
1	1	1	0

The Full-Adder

The second category of adder is the full-adder. The full-adder accepts two input bits and an input carry and generates a sum output and an output carry.
The basic difference between a full-adder and a half-adder is that the full-adder accepts an input carry. A logic symbol for a full-adder is shown in Fig.(7-3), and the truth table in Table 7-2 shows the operation of a full-adder.

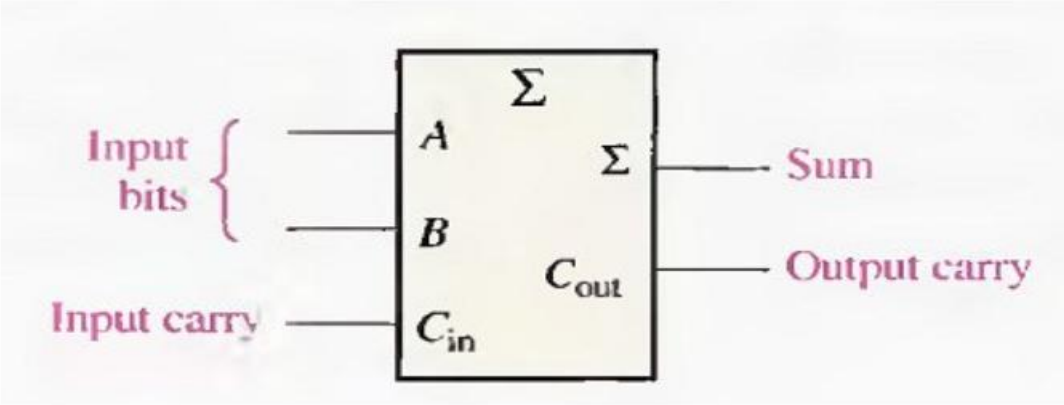

Fig.(7-3) Logic symbol for a full-adder.

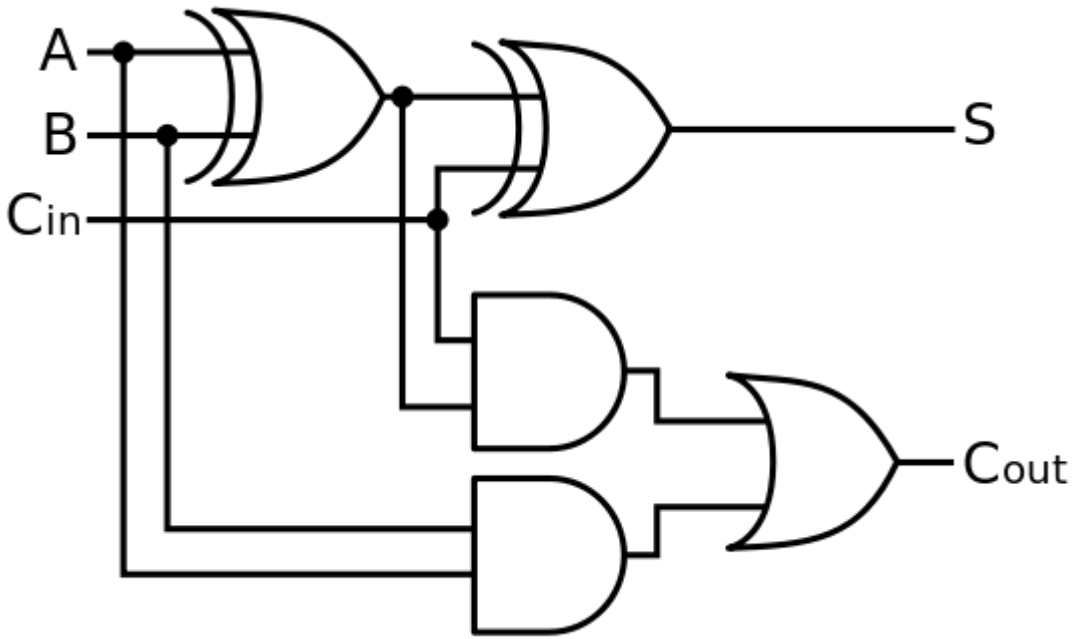

$$\sum = A \oplus B \oplus C_{in}$$

$$C_{out} = AB + (A \oplus B)C_{in}$$

A	B	C_{in}	C_{out}	Σ
0	0	0	0	0
0	0	1	0	1
0	1	0	0	1
0	1	1	1	0
1	0	0	0	1
1	0	1	1	0
1	1	0	1	0
1	1	1	1	1

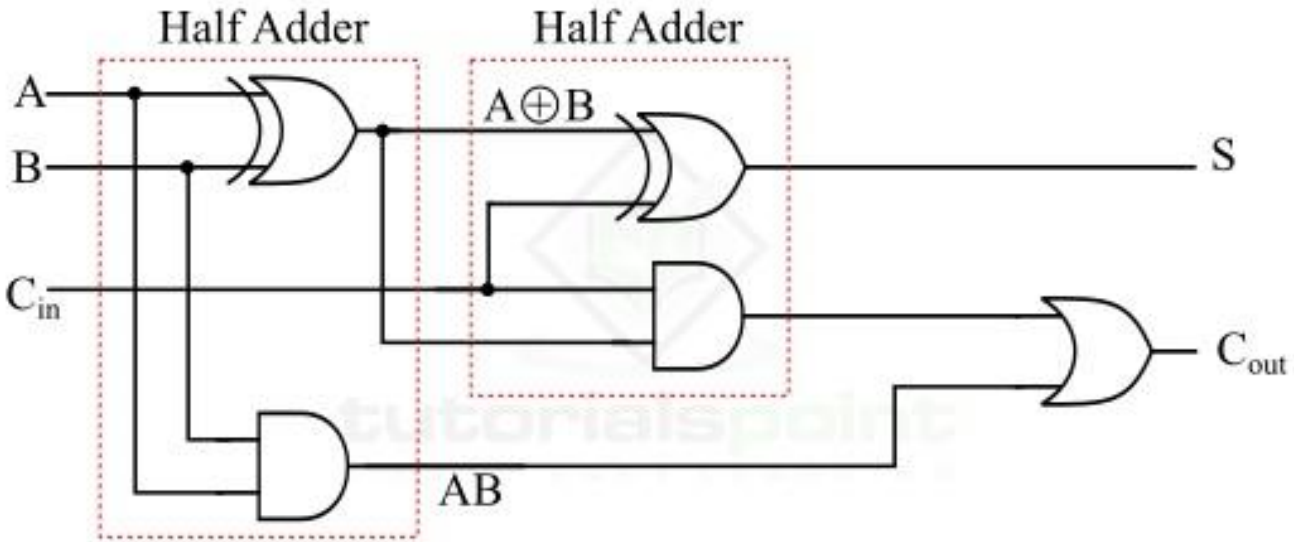

Figure 3 - Logic Diagram of Full Adder using Half Adder

Difference between SOP and POS

Comparison	SOP	POS
Abbreviation	Sum of products	Product of sum
Meaning	Product terms (AND operation) is added (OR operation).	In the product of sum, the inputs are given to the OR gate and the output of the OR gate are summed up by the AND gate.
Expression included	We have to consider the rows which have the output '1'.	We have to consider the rows which have the output '0'.
Representation	It is represented as 'm'.	It is represented by 'M'
Variables written	If the input is '0' it has to be inverted.	If the input is '1' it has to be inverted.
Implementation	All the AND terms or connected to the OR gate. The output of OR gate gives the output function.	All the OR terms or connected to the AND gate. The output of AND gate gives the output function.
Example	F= ABC+ DEG Where F is the output and A,B,C,D,E and G are the input variables.	F= (A+B+C).(D+E+G) Where F is the output and A,B,C,D,E and G are the input variables.

- Logic gates are the fundamental building blocks of digital circuits. These gates are implemented using various technologies, including CMOS (Complementary Metal-Oxide-Semiconductor) and BiCMOS (Bipolar CMOS).
- CMOS technology is widely used due to its low power dissipation and high noise margins,
- Whereas BiCMOS combines the advantages of both bipolar junction transistors (BJTs) and CMOS technology to enhance speed and drive capability.

Gate logic

- The inverter (nMOS, CMOS, BiCMOS)
- Two input nMOS, CMOS and BiCMOS NAND gates.
- Two input nMOS, CMOS and BiCMOS NOR gates.

nMOS → all nMOS transistors

CMOS → Consists of PMOS + NMOS

BiCMOS → Bipolar + CMOS = Bipolar (npn/pnp) + PMOS + NMOS

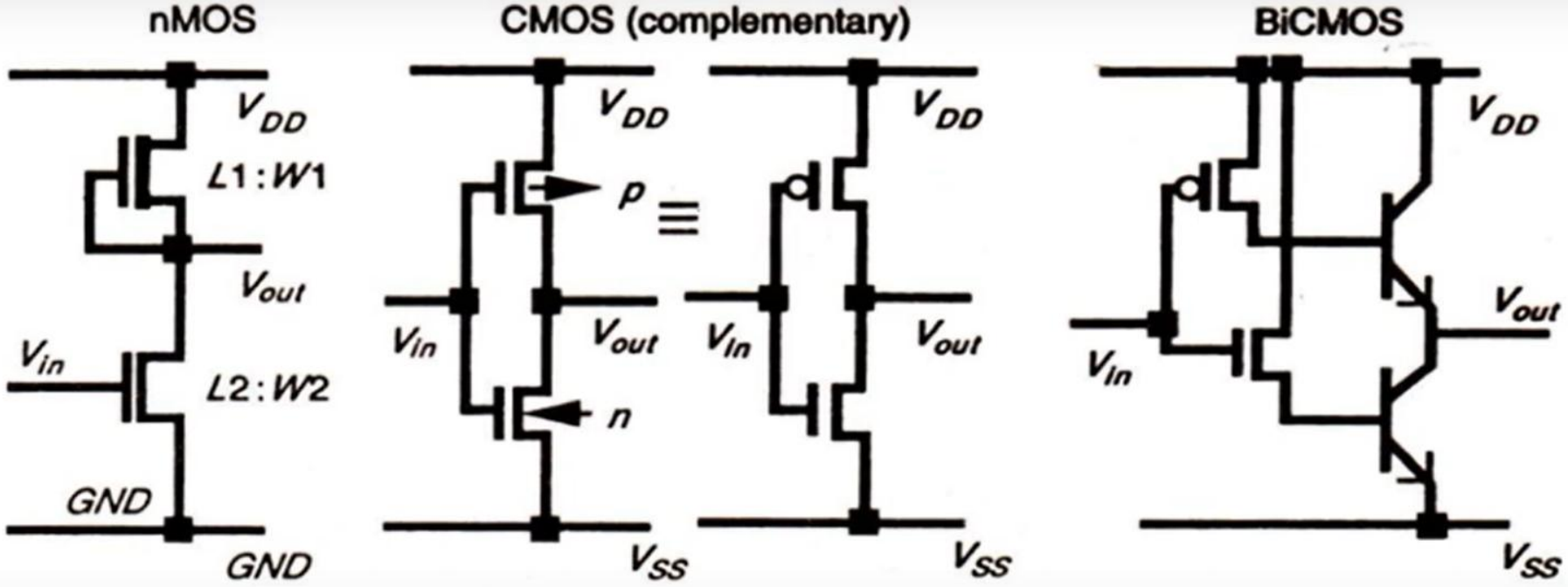

(a) Circuit symbols
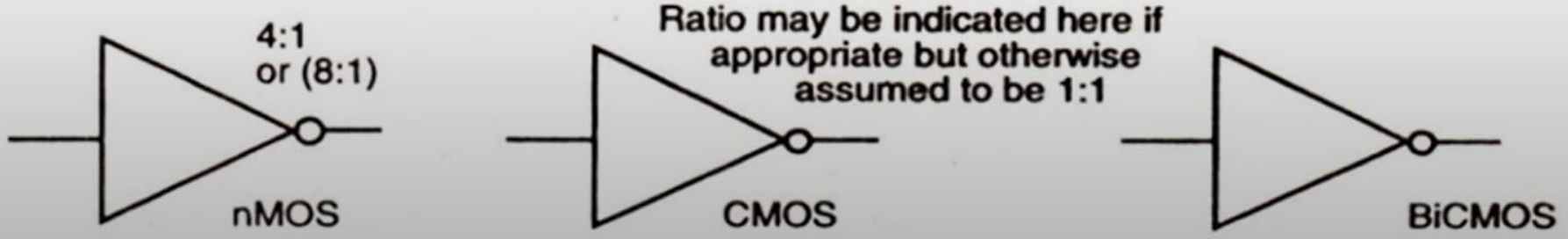
(*Note*: n- and p-transistors assumed to be min. size unless stated otherwise.)